9901-300

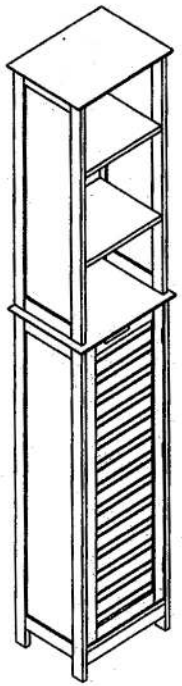

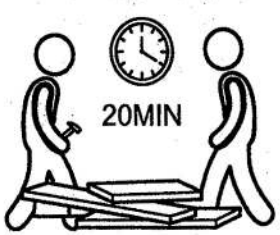

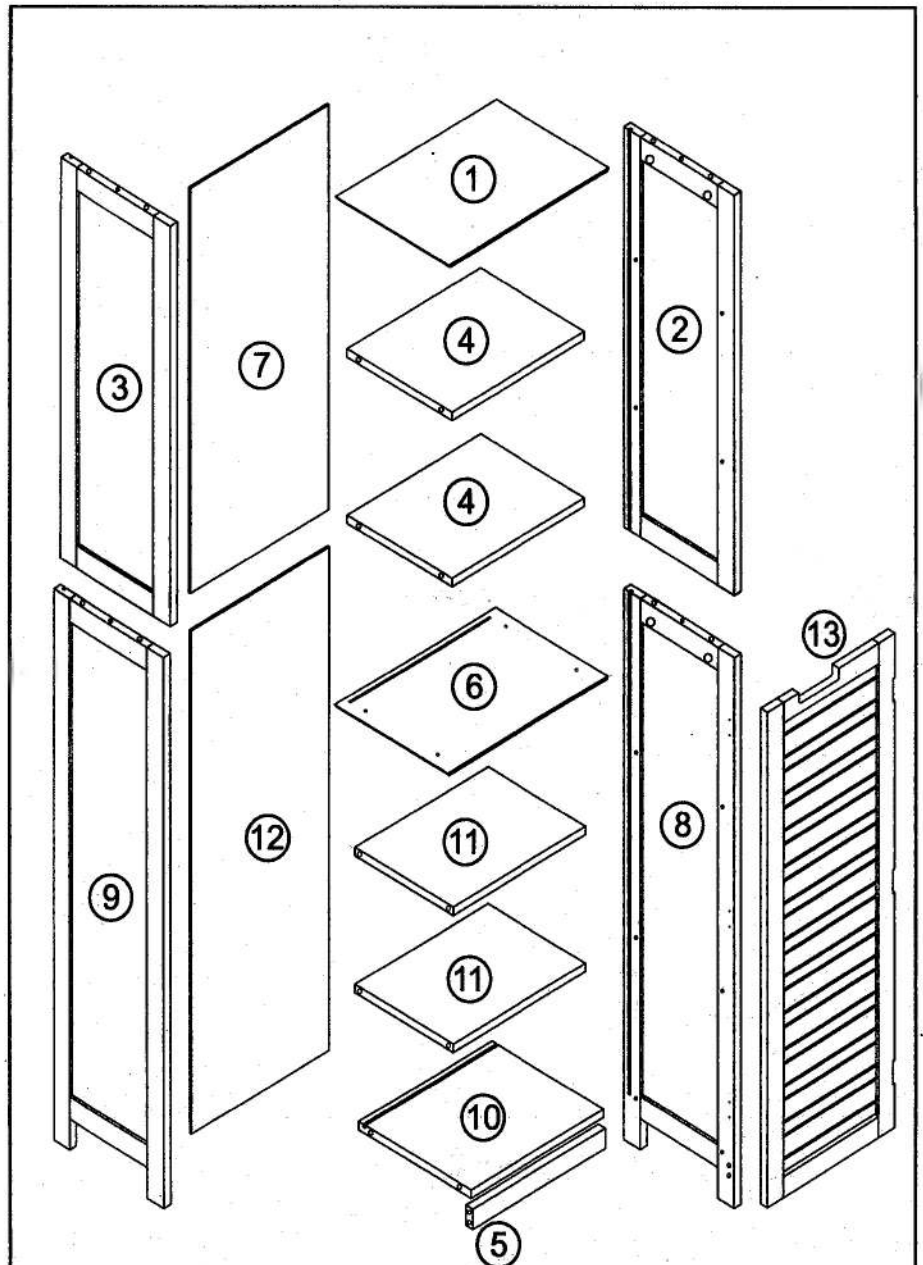

Ax28 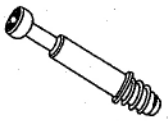 6x35mm	Bx28 15x12mm	Cx8 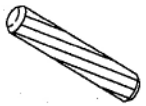 6x30mm
Dx1 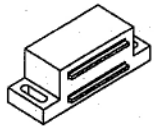	Ex10 3x14mm	Fx3
Gx13 3x12mm	Hx1 	Ix5 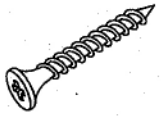 4x35mm
Jx1 	Kx1 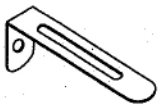	Lx8
Mx1 	Nx8 	

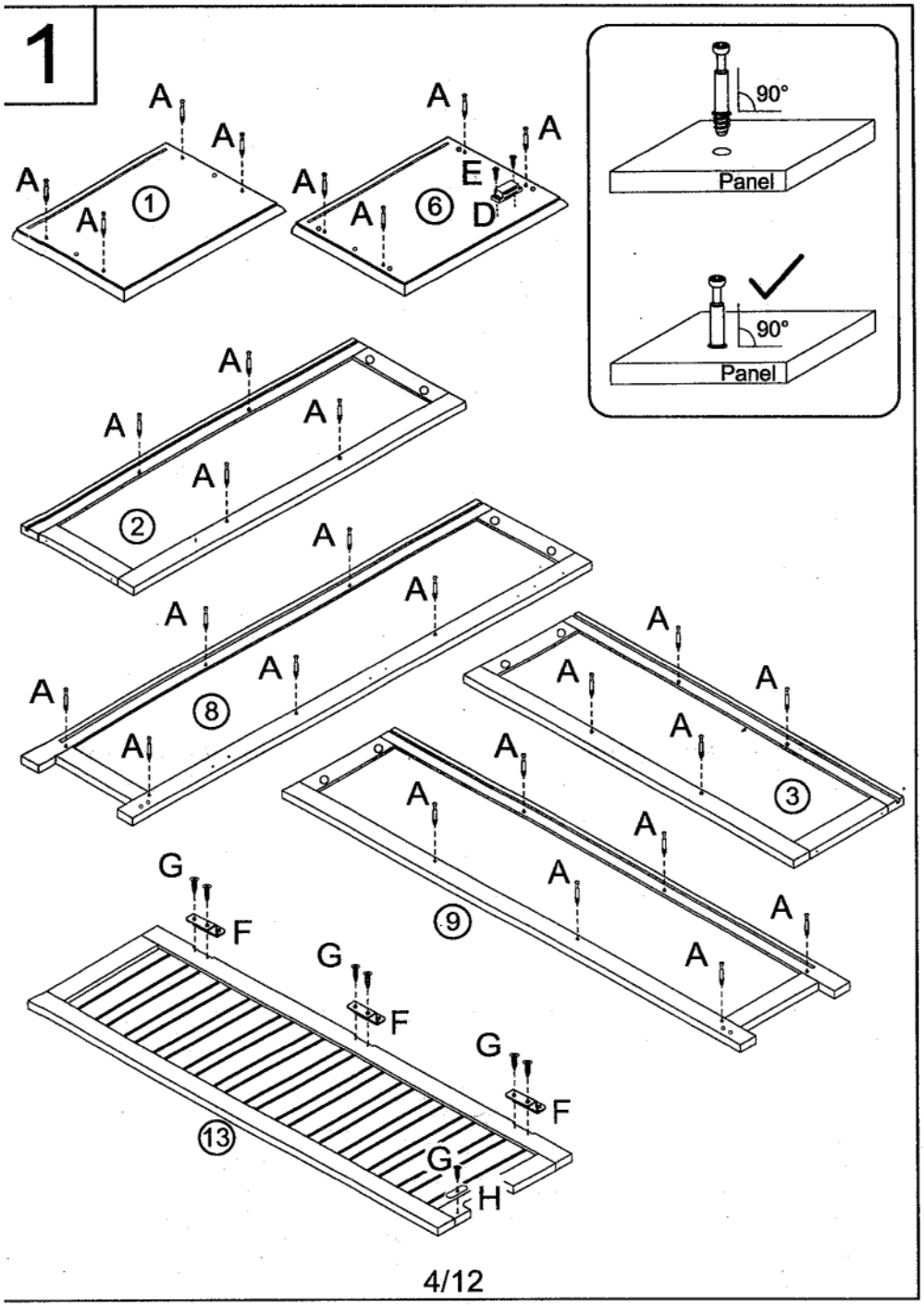

2

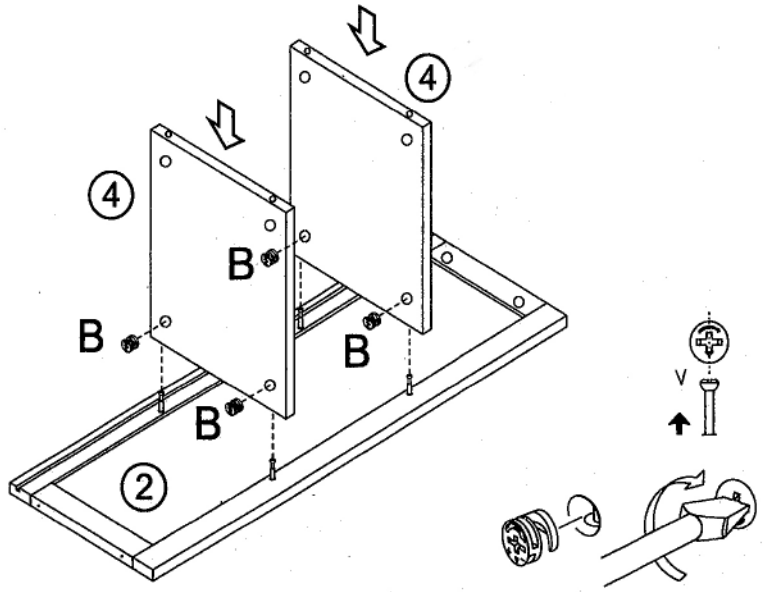

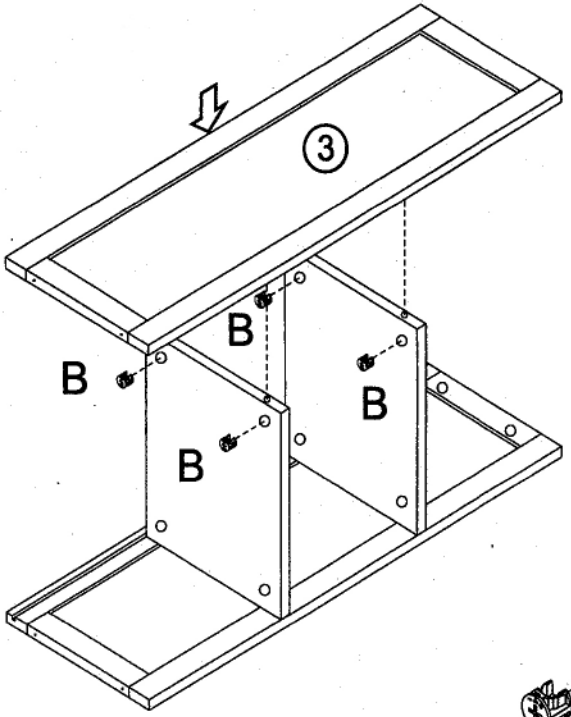

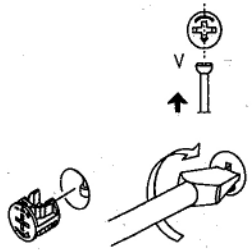

3

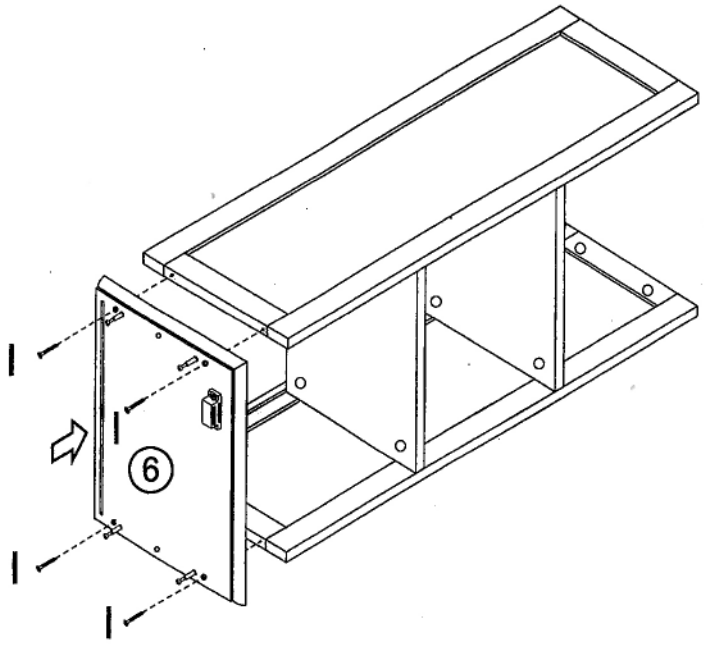

4

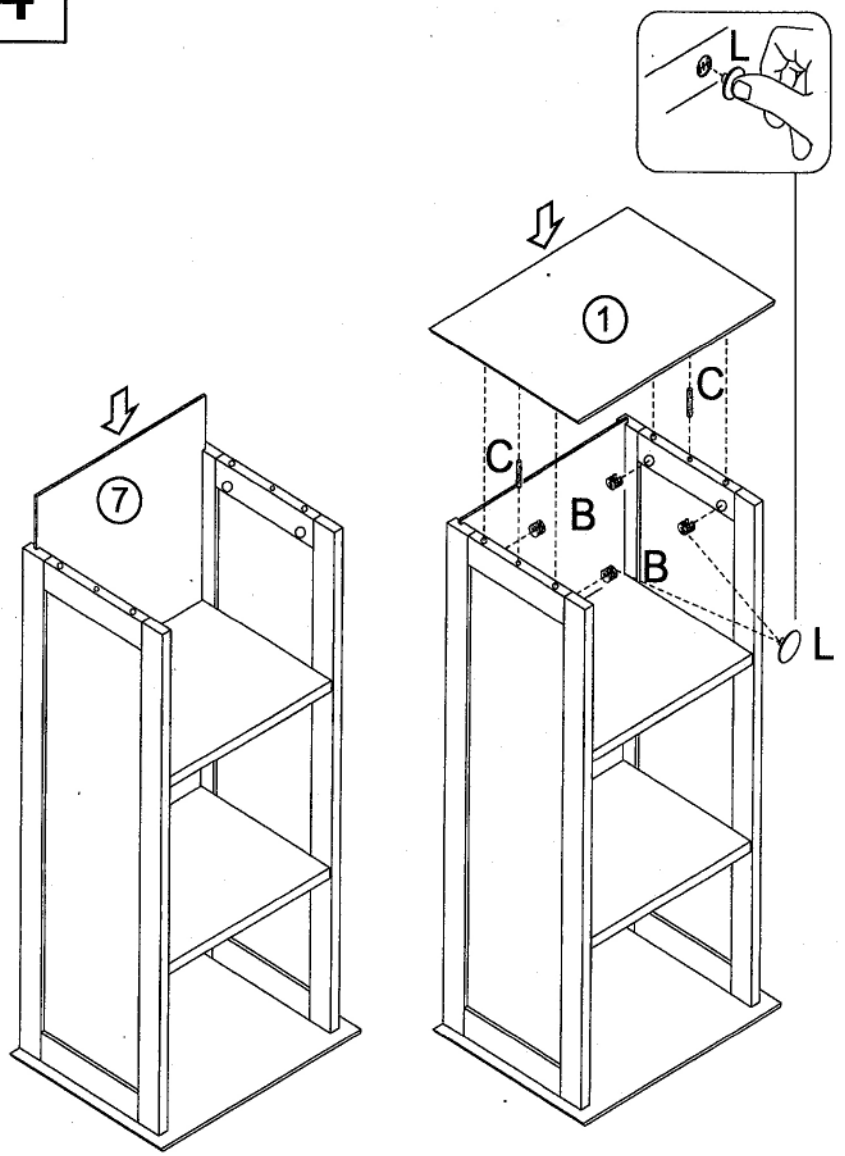

5

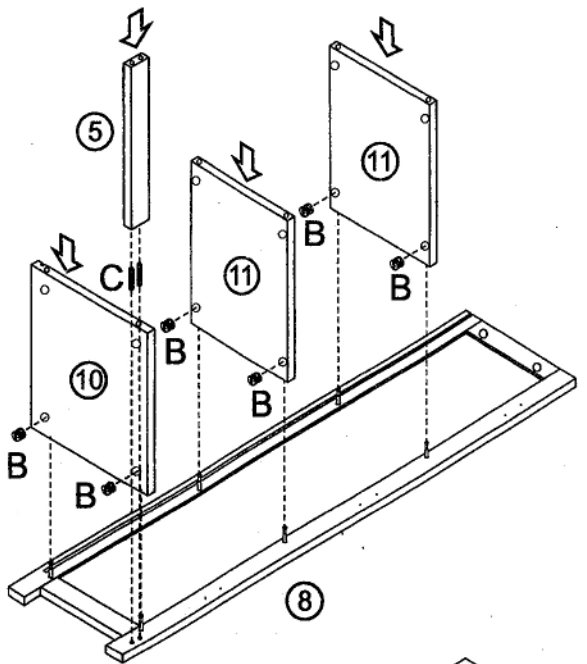

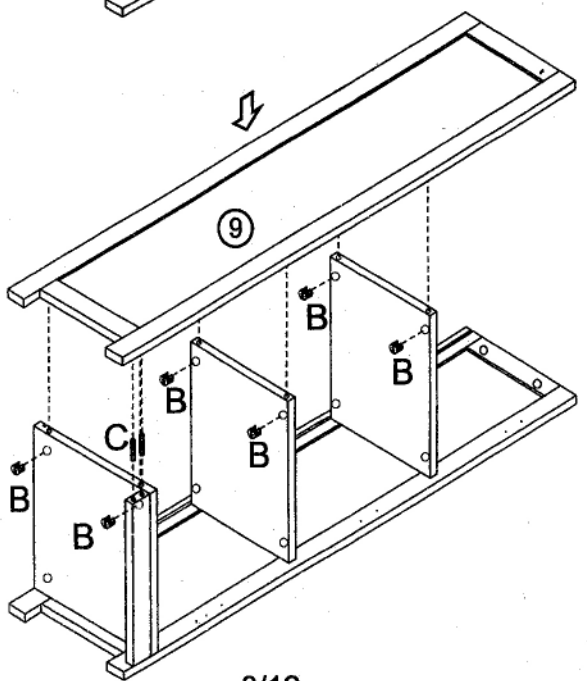

6

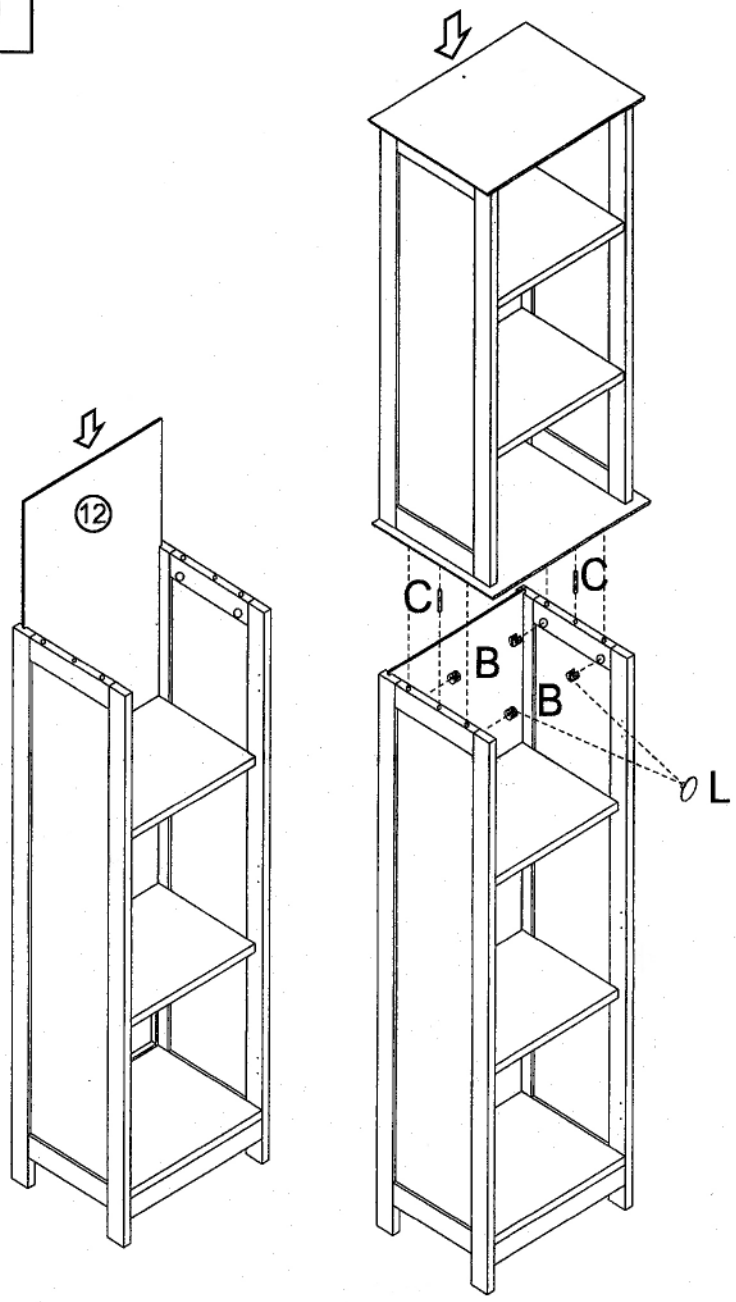

7

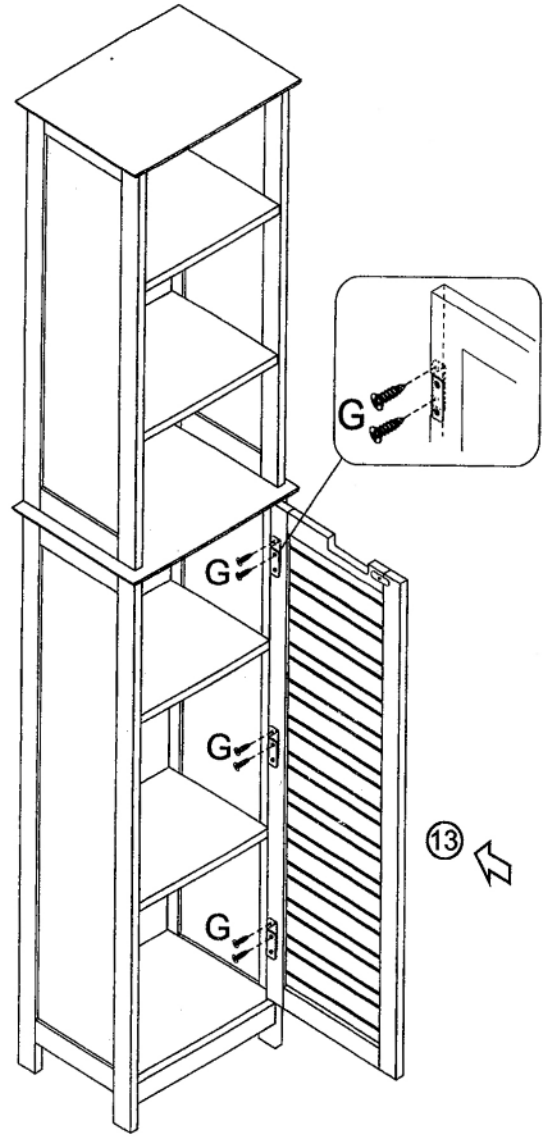

8

Avant de fixer “N”, s’assurer que la dimension "XX=YY".

Before fix “N”, please make sure size "XX=YY".

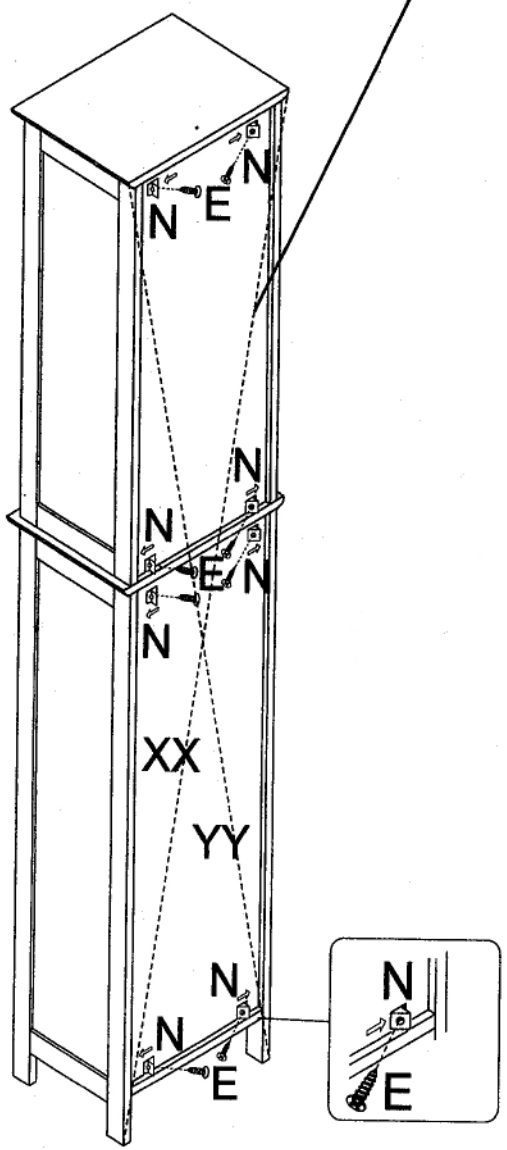
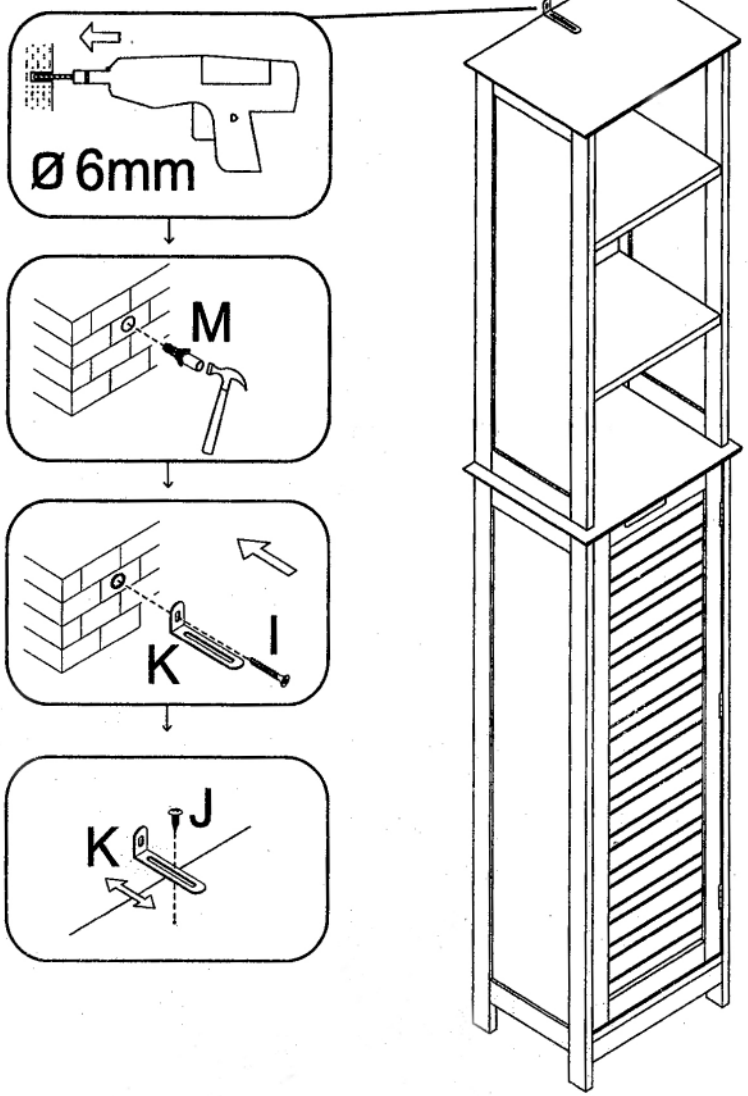
9